Short Term Prediction Framework for Moroccan Stock Market Using Artificial Neural Networks

Badre Labiad
Equipe MOAD-SCM Mohammadia School of Engineers Mohammed V University
Rabat, Morocco
labiad.badre@gmail.com

Abdelaziz Berrado
Equipe AMIPS Mohammadia School of Engineers Mohammed V University
Rabat, Morocco
berrado@emi.ac.ma

Loubna Benabbou
Département Sciences de la Gestion, Université du Québec à Rimouski (UQAR) Campus de Lévis
Québec, Canada
Loubna_benabbou@uqar.ca

ABSTRACT

In this paper we present a short term forecasting framework for stock markets based on Artificial Neural Networks. We are interested in predicting future trends of stock markets (Up, Down and Unchanged) in the very short term (10 to 60 minutes ahead). We present a framework to efficiently implement different ANN architectures namely Multi-Layers Perceptron (MLP) and the Long Short- Term Memory (LSTM). This framework involves the use of intraday prices data (tick-by-tick data) and a selection of technical indicators as input variables and fixes the issues related to the imbalanced target classes and the non-regularly spaced input data.We conduct different experimentations within the proposed framework on data from the Moroccan stock market.

CCS CONCEPTS

• **Computing methodologies → Neural networks**;

KEYWORDS

Short Term Prediction, Stock Market, Artificial Neural Networks

ACM Reference Format:
Badre Labiad, Abdelaziz Berrado, and Loubna Benabbou. 2018. Short Term Prediction Framework for Moroccan Stock Market Using Artificial Neural Networks. In *12TH INTERNATIONAL CONFERENCE ON INTELLIGENT SYSTEMS : THEORIES AND APPLICATIONS (SITA'18), October 24–25, 2018, Rabat, Morocco.* ACM, New York, NY, USA, 6 pages. https://doi.org/10.1145/3289402.3289520

1 INTRODUCTION

Stock market is the place where investors trade equities. The actors inside the stock market face a major risk of loss caused by the fluctuations of prices. These fluctuations are influenced by a wide variety of exogenous factors : political and economic events, investors' psychology... To make profitable transactions, investors and traders need to model markets behaviors to capture, in a proactive manner, investment signals. Classical investment strategies are generally based on daily transactions but the volatility of some market can give opportunities for making some profitable intraday strategies. This goal is very challenging due to the nature of market data which are characterized by their intensity, non-stationary, high degree of uncertainty and hidden relationships [9].
The intraday forecasting of stock market movements is a classification task of future trends in three classes : Up, Unchanged or Down movements.

The review of the studies related to classification of stock market trends shows that there is still a lack of uniform and ready to use framework for an efficient implementation of these classifications solutions [5, 25]. Moreover, the use of deep networks for stock market forecasting is a new field of research and there is just few publications in this topic. This paper aims to contribute to this research area.

Our goal is the prediction of the movements (Up, Unchanged and Down) of the stock market prices in the very short term (10 to 60 min ahead) using Deep Artificial Neural Networks (ANN). An experimental framework is proposed and different ANN architectures are tested and compared. The accuracy comparison of these models is performed by the analysis of the precision and recall metrics.

The remainder of this paper is organized as follows. Section II deals with the literature review. Details about experimental framework can be found in section III. The experimental results are presented in section IV. Finally, we conclude this study and discuss possible future work in section V.

2 LITERATURE REVIEW

Among tools for stock markets prediction, fundamental analysis, technical analysis and time series analysis are have been widely used. Nonetheless, the errors in forecasting using these approaches are often quite high. In addition, the complexity of modern financial markets requires new approaches to capture the fluctuations accurately and at the right time. This precise prediction would make it possible to make better informed investment decisions and a better search for investment opportunities. ANNs are suitable for this task due to their ability to learn nonlinear relations, handle noisy data and inputs of different kind [9]. More particularly, deep recurrent neural networks have the additional characteristic of handling sequential data [15].

The architectures of ANNs falls under two major categories : Shallow structures with few hidden layers and Deep structures with multiple hidden layers. Shallow ANNs were known for problems related to over-fitting, slow convergence and more importantly poor reaction in the case of major Drift-shift [23]. But the recent

Permission to make digital or hard copies of all or part of this work for personal or classroom use is granted without fee provided that copies are not made or distributed for profit or commercial advantage and that copies bear this notice and the full citation on the first page. Copyrights for components of this work owned by others than ACM must be honored. Abstracting with credit is permitted. To copy otherwise, or republish, to post on servers or to redistribute to lists, requires prior specific permission and/or a fee. Request permissions from permissions@acm.org.
SITA'18, October 24–25, 2018, Rabat, Morocco
© 2018 Association for Computing Machinery.
ACM ISBN 978-1-4503-6462-1/18/10…$15.00
https://doi.org/10.1145/3289402.3289520

development of Deep ANNs (DNN) has given a new reputation to this class of models. The breakthrough of DNN was in 2012 by [19] after the success achieved on the ImageNet classification challenge. Since this date they have gained big attention.

2.1 Artificial Neural Networks

Feedforward ANNs or multilayer perceptron (MLP) are oriented graphs with nonlinear computing unit interconnected by links. They are used for classification and regression purpose. The learning step of ANNs is performed by adjusting the interconnection between layers to minimize the out-of-sample error measure. ANNs are known for their capability as universal approximators [11]. An ANN with one hidden layer is sufficient for approximating any continuous functional relationship between input and output variables with an arbitrary degree of accuracy. We can formulate the learning task of an ANN as follows :

For a training set $D = (Y, X)$ with N elements and a loss function $L(Y_i, Y_{W,b}(X_i))$ we search parameters (W, b) such as :

$$Args \min_{W,b} \frac{1}{N} \sum_{i=1}^{N} L(Y_i, Y_{W,b}(X_i)) + \lambda\phi(W, b) \tag{1}$$

$\phi(W, b)$ is a regularization penalty to avoid over-fitting and λ is the parameter which determines the amount of regularization to consider. For classification problems the cross-entropy function is often used to represent the loss-function L :

$$-\sum_{i}\sum_{k} 1\{Y_i^{(k)} = 1\} log(\hat{Y}_i^{(k)}) \tag{2}$$

When i the sample index, k the class index, Y samples labels and $\hat{Y}$ predictions.

The learning step is performed by different possible methods like Backpropagation algorithm, Conjugate gradient algorithm and hybrid algorithms.

The output value $Y_{W,b}$ of a three-layer ANN can be formulated as :

$$Y_{W,b} = \sigma_3(\sum_{j=1}^{n} W_j h_j - b_3); h_j = \sigma_2(\sum_{i=1}^{m} W_{ij} X_i - b_{2j}) \tag{3}$$

Where σ_2 and σ_3 is the sigmoid activation function :

$$\sigma(x) = \frac{1}{1 + e^{-x}} \tag{4}$$

of the neurons of the output and the hidden layer respectively, n is the number of neurons in the hidden layer, W_j is the weight coefficient from j-neuron of the hidden layer to the output neuron, h_j is the output value of j-neuron of the hidden layer, b_3 is the threshold of the output neuron, m is the number of neurons in the input layer, W_{ij} are the weight coefficients from the i-input neuron to j-neuron of the hidden layer, X_i are the inputs values, b_{2j} is the threshold of the hidden layer [13].

ANNs have some hyper-parameters to be set before the training step : weights initialization, number of layers, numbers of units by layers and the learning rate. The choice of the values of these hyper-parameters affects the over-all performance of the models hence the particular difficulty of implementing ANNs.

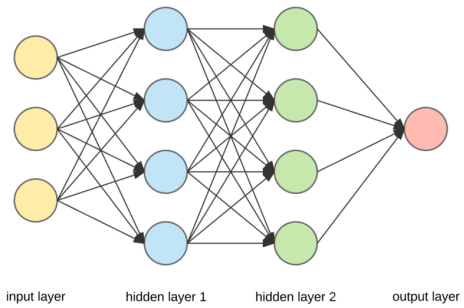

Figure 1: Multi-layer fully-connected neural network [12]

If ANNs are very useful for a wide variety of classification and regression tasks they become less efficient when it comes to tasks like the processing of sequential data.

2.2 Long Short Term Memory Models (LSTM)

In MLP, layers are fully-connected (Fig. 1) and there are no connections among units of the same layer. Different from conventionel MLP, the hidden units of the Recurrent Artificial Neural Networks (RNN) receive feedback from the previous state to current state and data can flow in any direction as opposed to feedforward neural network. As shown in the Fig. 2 the RNN takes X_t in time t as input and returns h_t hidden state in time t.

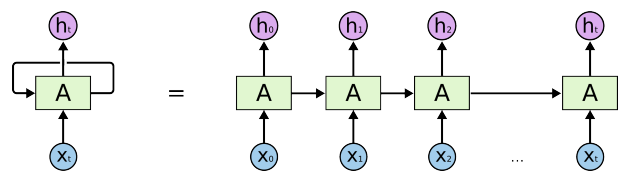

Figure 2: Recurrent Artificial Neural Networks [22]

RNN are capable of processing sequential data to perform some complicated tasks like image captioning, speech recognition and natural language processing. Theoretically, the inner structure of usual RNN should allow them to remember past events for an arbitraty duration and use them for present tasks but praticly, RNN have difficulties dealing with long term dependencies [7] because of vanishing and exploding gradient. LSTM were developed by Sepp Hochreiter and JÃijrgen Schmidhuber in [15] to over came long term dependencies problem. The structure of the memory unit of a LSTM is shown in Fig 3.

This unit memory is operating by using three gates : input gate, forget gate and output gate. In addition, the memory unit has a state cell indicated by S_t which represents the internal memory of the unit, it stores short term and long term memories. The LSTM does have the ability to remove or add information to the cell state by the gates system. The inputs to the memory unit are data x_t and the output is the forecasting h_t. The outputs h_t of the memory cells are abstract learned features, they synthesize the inportant parts of the input features. These learned features are propagated in the next LSTM units of the network to get more abstract features.

The state update and output of memory unit can be summarised as :

$$i_t = \sigma(W_i[h_{t-1}, x_t] + b_i) \tag{5}$$

$$f_t = \sigma(W_f[h_{t-1}, x_t] + b_f) \tag{6}$$

$$o_t = \sigma(W_o[h_{t-1}, x_t] + b_o) \tag{7}$$

$$\tilde{S}_t = tanh(W_s[h_{t-1}, x_t] + b_s] \tag{8}$$

$$S_t = f_t * S_{t-1} + i_t * \tilde{S}_t \tag{9}$$

$$h_t = o_t * tan(\tilde{S}_t) \tag{10}$$

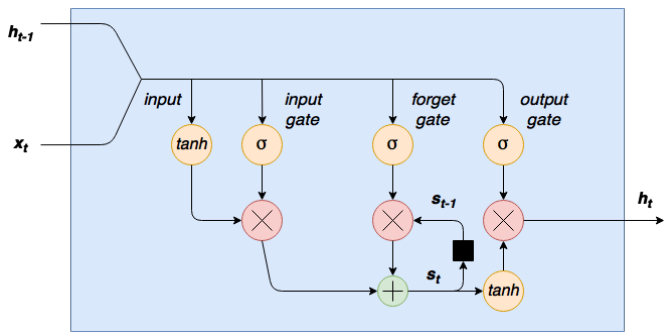

Figure 3: LSTM Memory Unit [3]

Where i_t, f_t and o_t are the outputs of differents gates, $\tilde{S}_t$ is the new state of memory cell, S_t is the final sate of memory cell and h_t is the final output of the memory unit. W_i, W_f, W_o, W_s, b_i, b_f, b_o and b_s are coefficients.

2.3 Artificial Neural Networks for stock market forecasting

For the purposes of very short-term stock market forecasting, technical indicators (TI) are often used as input variables [4, 6, 9, 16, 17, 21, 27, 27]. These indicators are combinations of past information of stock market behavior. Others possible input variables are News articles. Useful trading signals can be extracted from news articles hence their use to predict stock behaviors. [14, 20, 21, 28]. It should be noted at this level that the choice of data granularity depends on the desired forecasting horizon. For the purposes of intraday forecasting, tick-by-tick data are used [14, 21, 24].

In general, the input variables are preprocessed before their use. This step reduces the sensitivity of the ANNs to the amplitude variations between the input variables. Standardization technique is widely used for this purpose [1, 4, 9, 16, 18, 21].

For the learning phase of ANNs and in the context of stock market different techniques are used : Backpropagation algorithm [1, 6, 8, 18, 21]), Conjugate gradient algorithm [24] Hybrid algorithms [2], Kullback Leibler Divergence (KLD) algorithm [17], Localized Generalization Error (L-GEM) [17], Recursive least square (RLS) [4].

To evaluate the ability of the ANNs to correctly predict market movements, different schemes are employed :

Profitability tests : it consists of simulating a trading strategy and evaluating the generated profit/return [9, 14, 24, 26]. Accuracy tests : it done by evaluating some statistical indicators on an independent dataset (Out-of-sample test) : The sum of squared errors of prediction (SSE) [18], root-mean-squared error (RMSE) [1, 16, 20], Mean squared error (MSE) [8, 17, 24] Confusion Matrix [6, 21, 26].

3 THE PROPOSED EXPERIMENTAL FRAMEWORK

This section details the the proposed framework to implement ANNs for short-term stock market forecasting. The first sub-section details data preparation scheme and the second one exposes models training procedure. The different steps of the proposed framework are presented in fig. 4.

3.1 Data preprocessing

In this work we use of intraday data (or tick-by-tick data). These data capture the all the executed transactions in the stock market. The challenge with intraday data is that the data points are not regularly spaced due to the randomness of occurrence of trades. To overcome these difficulties, we transform data to regularly spaced intervals of observations (10, 30 and 60 minutes for example). For each interval, we consider the price of the last recorded transaction within the current time interval or the price of the previous interval in the case of absence of transactions in the current interval.
The target variable is the direction of change of stock prices, so we adopt the following codification for this variable : Up = If the price has increased between two successive intervals. Down = If the price has decreased. Unchanged = If the price has not changed.

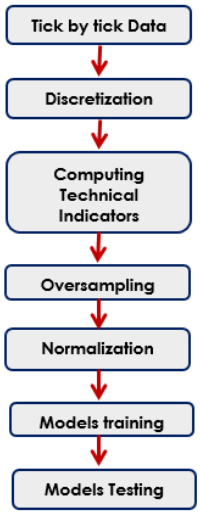

Figure 4: Main steps of the experimental framework.

As input variable we select 21 technical indicators among the most frequently used ones by market analysts. These indicators are presented in Table 1.

Table 1: List of Technical Indicators considered

Features	Description and Formula
MA5, MA3, MA10	MA[q] : is the average price of a stock over q intervals. $MA10_i = \frac{\sum_{j=i-9}^{i} P_j}{10}$
EMA5, EMA3, EMA10	EMA[q] : like MA but assigns weight to more recent prices. $EMA[q]_i = (P_i - EMA_{i-1}) * \gamma + EMA_{i-1}$ where γ = 2/(1+q)
P(t-q), q=1 to 5	5 lagged values
ROC(q), q=1 to 5	$ROC(q)_i = 100 * \frac{P_i - P_{i-q}}{P_{i-q}}$
SD10	Standard Deviation over 10 previous intervals. $SD[q]_i = \sqrt{\frac{1}{q-1} \sum_{j=i-9}^{i} (P_j - \overline{P})^2}$
PSL10	Psychological line over 10 previous intervals. $PSL(q)_i = 100 * \frac{UP_{qi}}{q}$ where UP_{qi} is the total number of intervals regarding stock price rises of the previous 10 intervals.
%K50, %D50	Stochastic oscillator : it contains two lines %K and %D over 50 previous intervals $\%K(q)_i = 100 * \frac{P_i - Min_q(P_i)}{Max_q(P_i) - Min_q(P_i)}$ $\%D(q)_i = 3 - day\ MA\ of\ \%K$
RSI10	Relative strength index line over the 10 previous intervals $RSI10 = 100 - \frac{100}{1+RS10}$ $RS10 = \frac{Average\ gain\ in\ 10\ intervals}{Average\ loss\ in\ 10\ intervals}$

The input variables have different absolute values. To fix this issue we use the normalization technique to transform these variables. The normalization prevents large input values from slowing down the learning process.

$$X'_{ij} = \frac{X_{ij} - \mu_j}{\sigma_j} \tag{11}$$

Where μ_j and σ_j is the mean and standard deviation of variable j. The preprocessed data is fed into the classifiers for forecasting stocks mouvements.

As experimental datasets we use a selection of 3 stocks prices series from the Moroccan stock market. The choice of these stocks is motivated by their relative high liquidity and the high number of transaction. The entire dataset covers a period of two years 2016-2017.

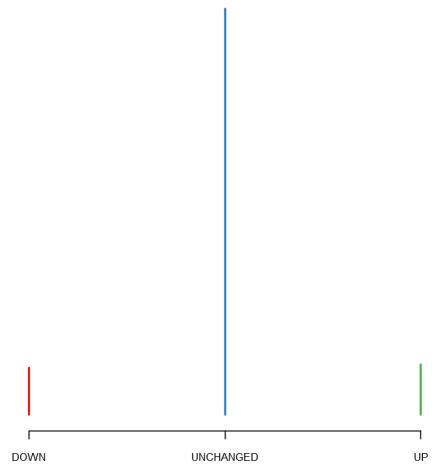

Figure 5: The imbalanced structure of Data

Table 2: Capitalizations of the selected stocks

Stocks	Sector of activity	Capitalization $ (billion)	% of global capitalization	Number of trades
IAM	Telecommunications	12,5	21%	25 146
ATW	Banking	8,7	14%	15 675
ADH	Real estate	1,6	3%	32 865

The datasets are divided into two parts. The first part (2/3 of observations) is used to train the models. The second (1/3) part is for out-of-sample evaluation and comparison of performances of different tested models.

The analysis of target variable showed an imbalanced structure (Fig.5). This situation will lead to a bias of the classifier toward the majority class. To overcome this difficulty, we adopt an oversampling scheme to balance between the three target classes in the training set. The oversampling technique adopted is the Synthetic Minority Over-sampling Technique (SMOTE) [10] which creates new synthetic observations from the minority classes based on similarities between existing examples in the dataset. The imbalanced structure of the test set is used without any change.

3.2 Neural networks training

We initialise weight matrices and bias vectors randomly. The number of layers and hidden units in each hidden layer are found by trial and error method. To reduce the computational time we have made use of GPU hardware (GeForce GTX 980M). The training process is done using TensorFlow framework.

3.2.1 MLP training. For the MLP, after several trials the architecture with two hidden layers was chosen. The hidden layers contain respectively 90 and 70 hidden units. We add a final dropout layer to prevent overfitting. For the activation function, it was decided

to use the ReLu function given its convergence speed :

$$ReLu(x) = max(0, x) \tag{12}$$

The MLP was trained for 60 epochs. The MLP was trained using the Adam Optimization algorithm.

3.2.2 LSTM training. The used LSTM architecture has 2 stacked layers and a softmax in the end. Each layer has 80 neurons. The LSTM was trained for 40 epochs using backpropagation method with the gradient-based optimisation.

4 EXPERIMENTAL RESULTS

In this section, we present the results of different classifications on the experimental data of three stocks for different forecasting horizons.

Table 3: MLP Accuracy

Stocks	F. Horz	ANN		
		Pr	Rec	F1
IAM	(10min)	0.68	0.61	0.64
	(30min)	0.64	0.51	0.56
	(60min)	0.60	0.49	0.53
ATW	(10min)	0.65	0.6	0.62
	(30min)	0.61	0.57	0.58
	(60min)	0.59	0.54	0.56
ADH	(10min)	0.78	0.69	0.73
	(30min)	0.68	0.58	0.62
	(60min)	0.67	0.55	0.60
	Mean values	0.65	0.57	0.60

For the context of our experimental framework the forecasting horizon of 10 minutes gives, in average, better results than the others forecasting horizon (30 min and 60 min).
From the comparison among the tested models we can see that they give very satisfactory results and are useful as forecasting tools for the very short-term prediction within the proposed framework.

5 CONCLUDING REMARKS

The prediction of short term variations of stock markets presents more difficulties than prediction based on daily data due to the noisy behavior of intraday movements. We propose a framework to overcome the difficulties related to the implementation of ANN on this type of data and to get accurate price mouvement forecasting. The framework consists of different steps of data preprocessing to get meaningful and ready to use input data. The results of experimentations show that the proposed approach makes it possible to obtain very good outputs from MLP and LSTM models. Further research may include some features selection schemes and the use trading strategies to assess the profitability of the models.

Table 4: LSTM Accuracy

Stocks	F. Horz	LSTM		
		Pr	Rec	F1
IAM	(10min)	0.76	0.7	0.72
	(30min)	0.69	0.61	0.64
	(60min)	0.66	0.58	0.61
ATW	(10min)	0.78	0.68	0.72
	(30min)	0.75	0.65	0.69
	(60min)	0.59	0.64	0.61
ADH	(10min)	0.84	0.77	0.80
	(30min)	0.82	0.79	0.80
	(60min)	0.80	0.80	0.80
	Mean values	0.74	0.69	0.71

RÉFÉRENCES

[1] Ajith Abraham, Baikunth Nath, and Prabhat Kumar Mahanti. 2001. Hybrid intelligent systems for stock market analysis. In *Computational science-ICCS 2001*. Springer, 337–345. http://link.springer.com/chapter/10.1007/3-540-45718-6_38

[2] Andreas S. Andreou, Efstratios F. Georgopoulos, and Spiridon D. Likothanassis. 2002. Exchange-rates forecasting : A hybrid algorithm based on genetically optimized adaptive neural networks. *Computational Economics* 20, 3 (2002), 191–210. http://www.springerlink.com/index/m0866687008m3g77.pdf

[3] Andy. 2017. Recurrent neural networks and LSTM tutorial in Python and TensorFlow. (Oct. 2017). http://adventuresinmachinelearning.com/recurrent-neural-networks-lstm-tutorial-tensorflow/

[4] C.M. Anish and Babita Majhi. 2016. Hybrid nonlinear adaptive scheme for stock market prediction using feedback FLANN and factor analysis. *Journal of the Korean Statistical Society* 45, 1 (2016), 64–76.

[5] George S. Atsalakis and Kimon P. Valavanis. 2009. Surveying stock market forecasting techniques âĂŞ Part II : Soft computing methods. *Expert Systems with Applications* 36, 3 (April 2009), 5932–5941. https://doi.org/10.1016/j.eswa.2008.07.006

[6] Shipra Banik, A. F. M. Khodadad Khan, Mohammad Anwer, Shipra Banik, A. F. M. Khodadad Khan, and Mohammad Anwer. 2014. Hybrid Machine Learning Technique for Forecasting Dhaka Stock Market Timing Decisions, Hybrid Machine Learning Technique for Forecasting Dhaka Stock Market Timing Decisions. *Computational Intelligence and Neuroscience, Computational Intelligence and Neuroscience* 2014, 2014 (Feb. 2014), e318524. https://doi.org/10.1155/2014/318524,10.1155/2014/318524

[7] Y. Bengio, P. Simard, and P. Frasconi. 1994. Learning long-term dependencies with gradient descent is difficult. *IEEE Transactions on Neural Networks* 5, 2 (Mar 1994), 157–166. https://doi.org/10.1109/72.279181

[8] Qing Cao, Karyl B. Leggio, and Marc J. Schniederjans. 2005. A comparison between Fama and French's model and artificial neural networks in predicting the Chinese stock market. *Computers & Operations Research* 32, 10 (Oct. 2005), 2499–2512. https://doi.org/10.1016/j.cor.2004.03.015

[9] Pei-Chann Chang, Chen-Hao Liu, Jun-Lin Lin, Chin-Yuan Fan, and Celeste S.P. Ng. 2009. A neural network with a case based dynamic window for stock trading prediction. *Expert Systems with Applications* 36, 3 (April 2009), 6889–6898. https://doi.org/10.1016/j.eswa.2008.08.077

[10] Nitesh V. Chawla, Kevin W. Bowyer, Lawrence O. Hall, and W. Philip Kegelmeyer. 2002. SMOTE : synthetic minority over-sampling technique. *Journal of artificial intelligence research* 16 (2002), 321–357. http://www.jair.org/papers/paper953.html

[11] George Cybenko. 1989. Approximation by superpositions of a sigmoidal function. *Mathematics of Control, Signals, and Systems (MCSS)* 2, 4 (1989), 303–314.

[12] Arden Dertat. 2017. Applied Deep Learning - Part 1 : Artificial Neural Networks. (Aug. 2017). https://towardsdatascience.com/applied-deep-learning-part-1-artificial-neural-networks-d7834f67a4f6

[13] Svitlana Galeshchuk. 2014. Neural-Based Method of Measuring Exchange-Rate Impact on International Companies' Revenue. In *Distributed Computing and Artificial Intelligence, 11th International Conference*, Sigeru Omatu, Hugues Bersini, Juan M. Corchado, Sara RodrÃŋguez, Pawe\l Pawlewski, and Edgardo Bucciarelli (Eds.). Springer International Publishing, Cham, 529–536.

[14] Tomer Geva and Jacob Zahavi. 2014. Empirical evaluation of an automated intraday stock recommendation system incorporating both market data and textual news. *Decision Support Systems* 57 (2014), 212–223.

[15] Sepp Hochreiter and JÃijrgen Schmidhuber. 1997. Long Short-Term Memory. *Neural Computation* 9, 8 (1997), 1735–1780. https://doi.org/10.1162/neco.1997.9.8.1735 arXiv:https://doi.org/10.1162/neco.1997.9.8.1735

[16] Chih-Ming Hsu. 2013. A hybrid procedure with feature selection for resolving stock/futures price forecasting problems. *Neural Computing and Applications* 22, 3-4 (March 2013), 651–671. https://doi.org/10.1007/s00521-011-0721-4

[17] Ashraf S. Hussein, Ibrahim M. Hamed, and Mohamed F. Tolba. 2015. An Efficient System for Stock Market Prediction. In *Intelligent Systems'2014*. Vol. 323. Springer International Publishing, Cham, 871–882.

[18] Zabir Haider Khan, Tasnim Sharmin Alin, and Md Akter Hussain. 2011. Price prediction of share market using artificial neural network (ANN). *International Journal of Computer Applications* 22, 2 (2011), 42–47. http://citeseerx.ist.psu.edu/viewdoc/download?doi=10.1.1.206.4394&rep=rep1&type=pdf

[19] Alex Krizhevsky, Ilya Sutskever, and Geoffrey E. Hinton. 2017. ImageNet classification with deep convolutional neural networks. *Commun. ACM* 60, 6 (May 2017), 84–90. https://doi.org/10.1145/3065386

[20] Xiaodong Li, Xiaodi Huang, Xiaotie Deng, and Shanfeng Zhu. 2014. Enhancing quantitative intra-day stock return prediction by integrating both market news and stock prices information. *Neurocomputing* 142 (Oct. 2014), 228–238. https://doi.org/10.1016/j.neucom.2014.04.043

[21] Xiaodong Li, Haoran Xie, Ran Wang, Yi Cai, Jingjing Cao, Feng Wang, Huaqing Min, and Xiaotie Deng. 2016. Empirical analysis : stock market prediction via extreme learning machine. *Neural Computing and Applications* 27, 1 (Jan. 2016), 67–78. https://doi.org/10.1007/s00521-014-1550-z

[22] Christopher Olah. 2015. Understanding LSTM Networks – colah's blog. (2015). http://colah.github.io/posts/2015-08-Understanding-LSTMs/

[23] C. Quek, M. Pasquier, and N. Kumar. 2008. A novel recurrent neural network-based prediction system for option trading and hedging. *Applied Intelligence* 29, 2 (Oct. 2008), 138–151. https://doi.org/10.1007/s10489-007-0052-4

[24] Juan C. Reboredo, JosÃĺ M. MatÃŋas, and Raquel Garcia-Rubio. 2012. Nonlinearity in Forecasting of High-Frequency Stock Returns. *Computational Economics* 40, 3 (Oct. 2012), 245–264. https://doi.org/10.1007/s10614-011-9288-5

[25] Sneha Soni. 2011. Applications of ANNs in stock market prediction : a survey. *International Journal of Computer Science & Engineering Technology* 2, 3 (2011), 71–83. http://citeseerx.ist.psu.edu/viewdoc/download?doi=10.1.1.404.1909&rep=rep1&type=pdf

[26] Chih-Fong Tsai, Yuah-Chiao Lin, David C. Yen, and Yan-Min Chen. 2011. Predicting stock returns by classifier ensembles. *Applied Soft Computing* 11, 2 (2011), 2452–2459.

[27] Liang-Ying Wei, Tai-Liang Chen, and Tien-Hwa Ho. 2011. A hybrid model based on adaptive-network-based fuzzy inference system to forecast Taiwan stock market. *Expert Systems with Applications* (2011).

[28] Yuzheng Zhai, Arthur Hsu, and Saman K. Halgamuge. 2007. Combining news and technical indicators in daily stock price trends prediction. In *Advances in Neural NetworksâĂŞISNN 2007*. Springer, 1087–1096. http://link.springer.com/chapter/10.1007/978-3-540-72395-0_132